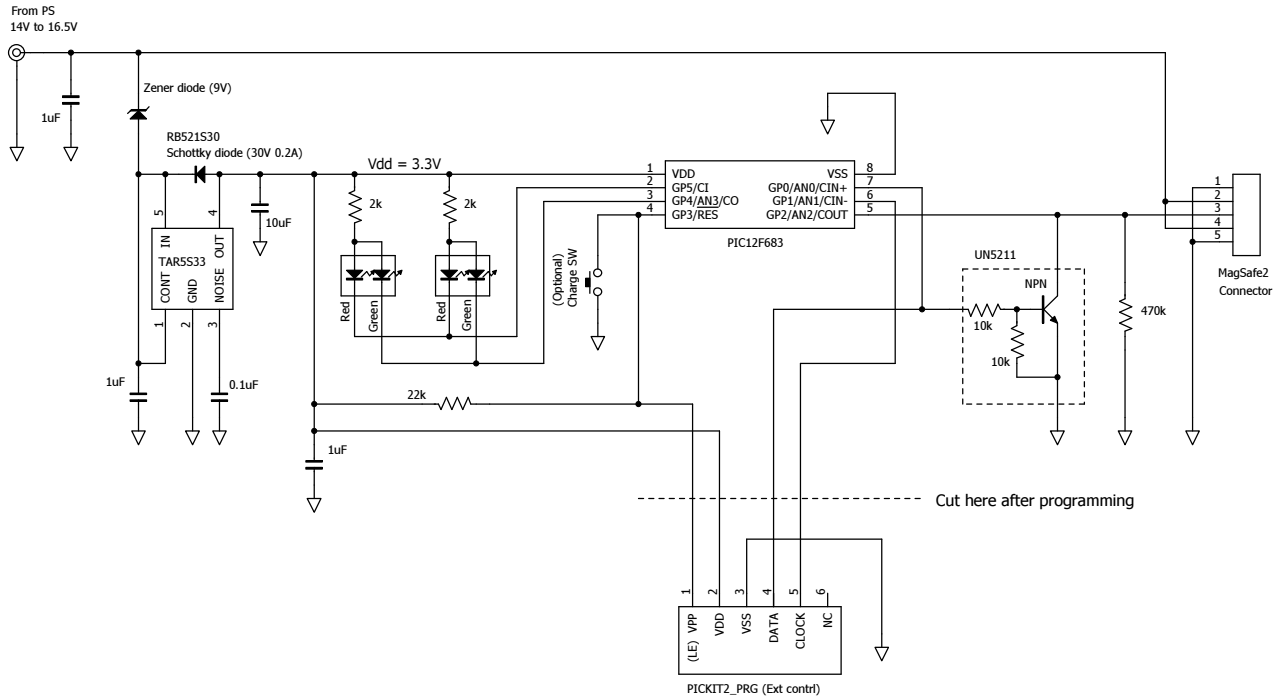

Title MagSafe interface	Scale NA
Date 2013/01/04	Ref No.
File name MagSafe2	Designed by Shuichiro Hirakawa